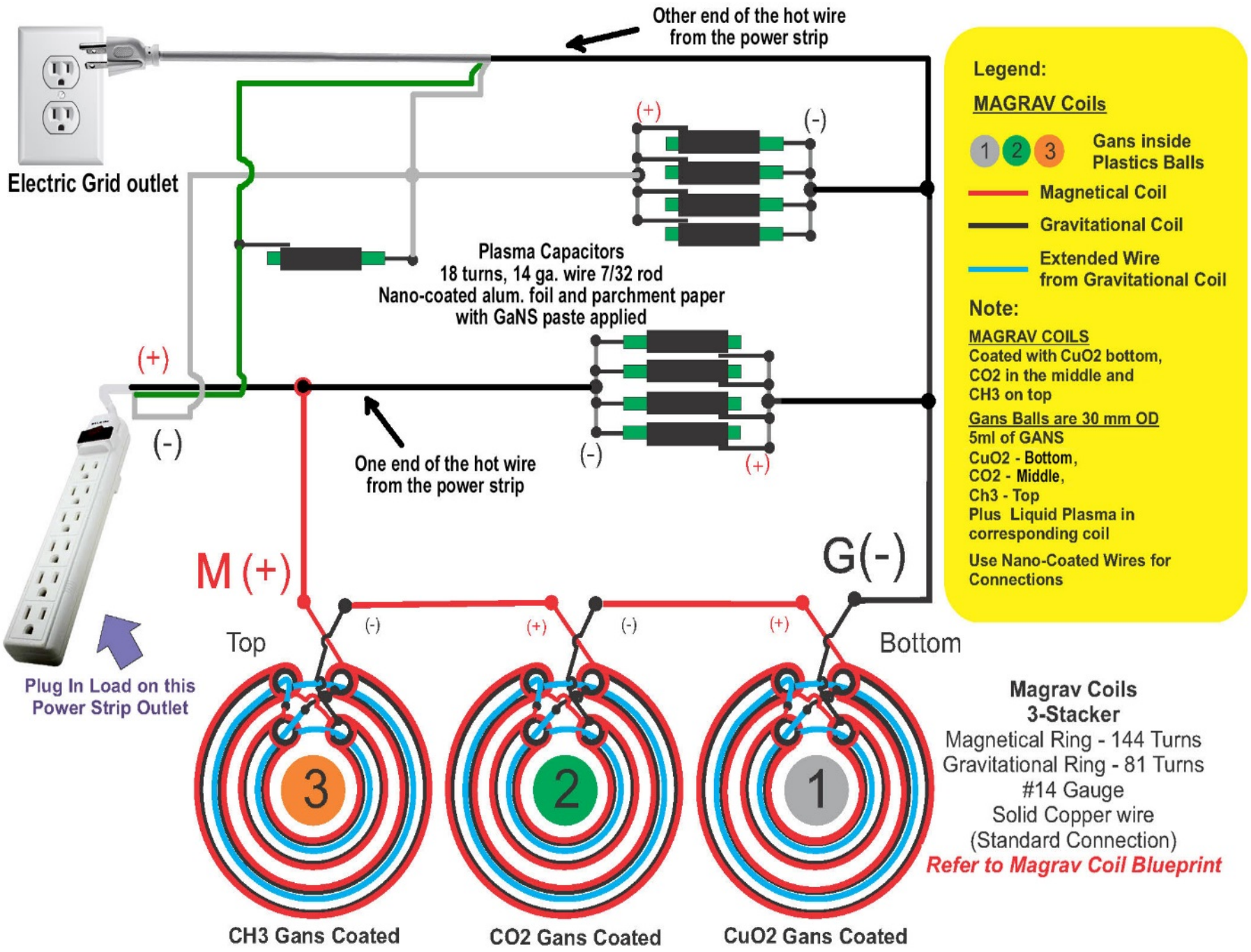MAGRAV CONNECTIONS- Dr Rodrigo V Unit